ELECTRONICS, INC.
44 FARRAND STREET
BLOOMFIELD, NJ 07003
(973) 748–5089

NTE2026
Integrated Circuit
Gas–Discharge Display Driver

Description:

The NTE2026 is a monolithic high–voltage bipolar integrated circuit which dramatically reduces the number of discrete components required to link MOS, or other low–voltage circuitry, with the anodes of gas–discharge display panels.

This device contains six drivers. Each driver has appropriate level shifting, signal amplification, output off–state voltage bias, and 40mA output current sourcing for sequential addressing of display panel anodes. The inputs include pull–down resistors for direct connection to open–drain PMOS logic.

The NTE2026 can be used in a wide variety of low– to high–voltage applications. High reliability, small size, ease of installation, and low cost make this device an ideal choice for many applications.

Features:

- TTL/MOS Compatible Inputs
- High Output Breakdown Voltage
- High Output Current capability
- Low Power
- Reliable Monolithic Construction

Absolute Maximum Ratings: (T_A = +25°C unless otherwise specified)

Supply Voltage, V_{BB} . . . . . +115V
Input Voltage, V_{IN} . . . . . +20V
Output Current, I_{OUT} . . . . . –40mA
Power Dissipation, P_D 2.1W
Derate Above +25°C . . . . . 16.7mW/°C
Operating Temperature Range, T_A . . . . . –20° to +85°C
Storage Temperature Range, T_{stg} . . . . . –55° to +150°C

Recommended Operating Conditions:

Parameter	Symbol	Min	Typ	Max	Unit
Supply Voltage	V_{BB}	–	–	100	V
Input ON Voltage	V_{IN}	2.4	–	15	V
Output ON Current	I_{IN}	–	–	25	mA

Electrical Characteristics: (T_A = +25°C, V_{BB} = 110V, unless otherwise specified)

Parameter	Symbol	Test Conditions	Min	Typ	Max	Unit
Output Leakage Current	I_{OUT}	V_{IN} = 0.4V, T_A = +70°C	–	–	15	µA
Output OFF Voltage	V_{OUT}	V_{IN} = 0.4V	–	–	1.0	V
Output Pull–Down Current	I_{OUT}	Input Open, V_{OUT} = V_{BB}	600	900	1500	µA
Output ON Voltage	V_{OUT}	V_{IN} = 2.4V, I_{OUT} = –25mA	107	108	–	V
Input ON Current	I_{IN}	V_{IN} = 2.4V	–	120	225	µA
		V_{IN} = 5.0V	–	375	650	
Supply Current	I_{BB}	All Input Open	–	10	100	µA
		Two Inputs = 2.4V	–	2.5	4.5	mA

Note 1. Positive (negative) current is defined as going into (coming out of) the specified device pin.
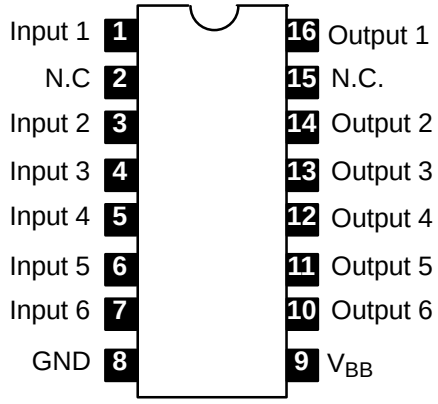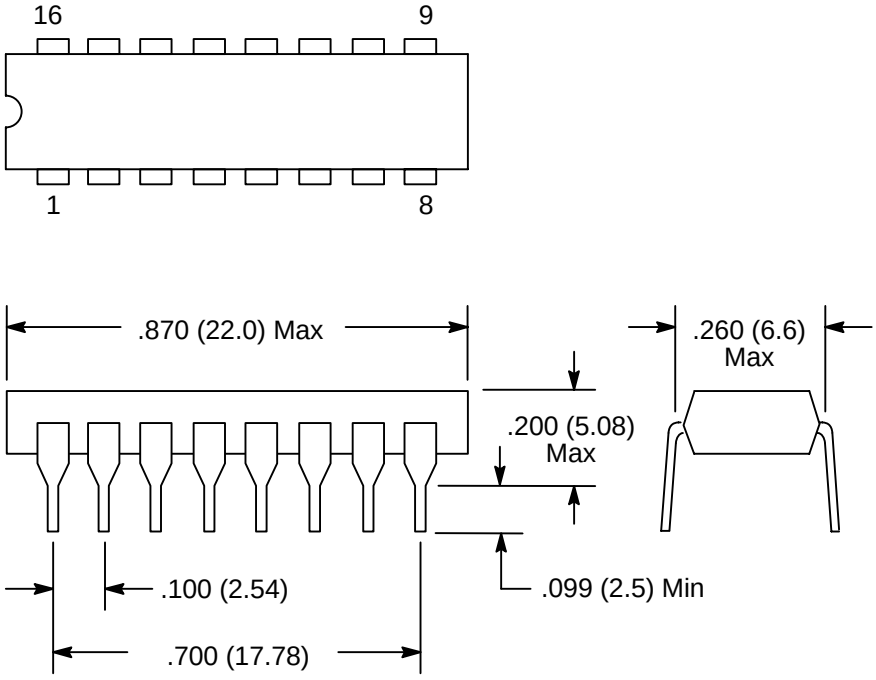
Pin Connection Diagram