ELECTRONICS, INC.
44 FARRAND STREET
BLOOMFIELD, NJ 07003
(973) 748–5089
http://www.nteinc.com

RoHS
2002/95/EC

NTE441B
Hardware
Heat Sink, Undrilled Mounting Surface

Features:

- 0.7°C/W Thermal Resistance
- Panel Mounting

General Specifications:
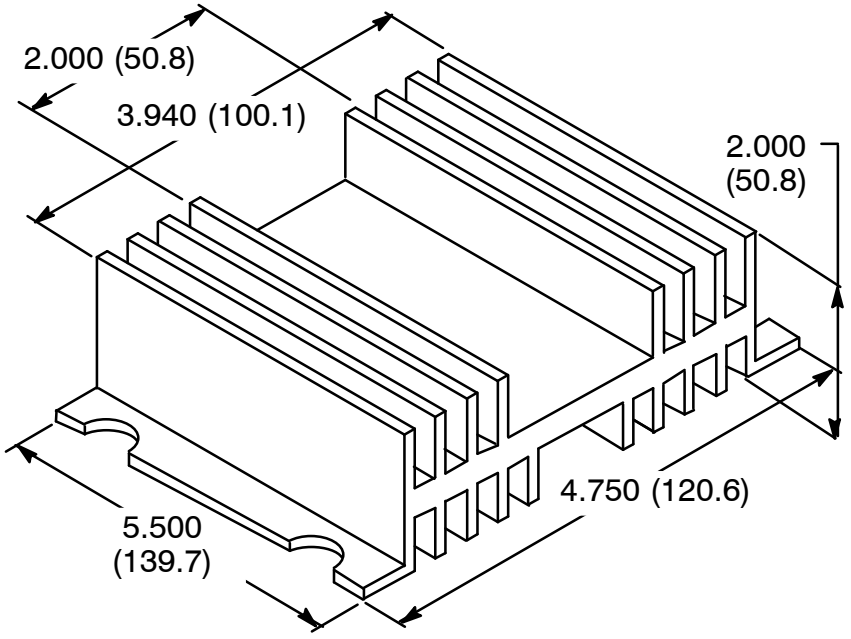
Thermal Resistance . . . . . 0.7°C/W
Surface Area . . . . . 254 in^2 (1640 cm^2)
Heat Sink Mounting . . . . . Panel Mount
Weight . . . . . 1.16 lbs. (526 grs)
Material . . . . . Aluminum
Finish . . . . . None
Mounting Screw Torque . . . . . 15 – 20 in lbs. (1.7 – 2.2 nm)
Accepts Fan . . . . . No