ELECTRONICS, INC.
44 FARRAND STREET
BLOOMFIELD, NJ 07003
(973) 748–5089

NTE1292
Integrated Circuit
IF Amplifier and Detector

Description:

The NTE1292 is a monolithic integrated circuit in a 14–Lead DIP type package specifically designed for audio detection in TV and FM radio receivers. It incorporates an 8–stage limiting IF amplifier and balanced detector plus a DC operated volume control.

Pin3 and Pin4 are connected to the collector and base of a transistor which may be used as an AF–preamplifier or as a switch.

At Pin12 a zener–diode is accessible which can be used to stabilize the supply voltage of this integrated circuit or the voltage of other circuit elements in the set.

Features:

- Electronic Attenuator: Replaces Conventional AC Volume Control
- Volume Reduction Range: 85dB Typ
- Sensitivity: 3dB Limiting Voltage 30μV Typ
- Excellent AM Rejection 68dB Typ at 10mV
- Audio Output Voltage: 1V Typ
- Wide Supply Voltage Range: V_{CC} = 6V to 18V
- Internal Zener Diode Regulator
- Very Low External Component Requirement
- Simple Detector Alignment: One Coil

Absolute Maximum Ratings:

Supply Voltage, V_{11} 18V
Volume Control Voltage, V_5 . . . . . 4V
Zener Current, I_{12} 20mA
Transistor Collector Current, I_3 . . . . . 5mA
Transistor Base Current, I_4 . . . . . 2mA
Bias Resistance (Max), $R_{13–14}$ 1kΩ
Operating Temperature Range, T_{opr} . . . . . –15° to +70°C
Storage Temperature Range, T_{stg} . . . . . –65° to +150°C

Electrical Characteristics: (V_{CC} = 12V, T_A = +25°C unless otherwise specified)

Parameter	Symbol	Test Conditions	Min	Typ	Max	Unit
Supply Current	I_{CC}	$R_5 = \infty$	10	14	18	mA
		$R_5 = 0$	11	–	20	mA
IF Voltage Gain	G_V	f = 5.5MHz	–	68	–	dB
IF Output Voltage (Each Output)	V_O	At Limiting	170	250	–	mV_{P-P}
AF Output Voltage	V_{AF}	f = 5.5MHz, $\Delta f = \pm 50kHz$, f_{MOD} = 1kHz, V_I = 10mV, Q = 45	0.7	1.0	–	V
Distortion		f = 5.5MHz, Δf = 25khz, f_{MOD} = 1kHz, V_I = 10mV, Q = 45	–	1.5	–	%
		f = 10.7MHz, $\Delta f = \pm 50kHz$, f_{MOD} = 1kHz, V_I = 10mV, Q = 20	–	0.2	–	%
Input Voltage Before Limiting	V_{LIM}	f = 5.5MHz, $\Delta f = \pm 50kHz$, f_{MOD} = 1kHz, Q = 45	–	30	60	µV
Input Impedance	Z_I	f = 5.5MHz	15/6	40/4.5	–	kΩ/pF
Output Resistance	R_O		1.9	2.6	3.3	kΩ
Volume Control Range	$\frac{V_{af}\ Max}{V_{af}\ Min}$		70	85	–	dB
DC Component of the Output Signal	V_8	V_I = 0	6.2	7.3	8.4	V
AM Rejection	a_{AM}	f = 5.5MH$_Z$, $\Delta f = \pm 50kH_Z$, f_{MOD} = 1kH$_Z$, V_I = 500µV, MOD = 30%	50	60	–	dB
		f = 5.5MH$_Z$, $\Delta f = \pm 50H_Z$, f_{MOD} = 1kH$_Z$, V_I = 10mV, MOD = 30%	–	68	–	dB
Potentiometer Resistance	R_5	1dB Attenuation	–	3.7	4.7	kΩ
Potentiometer Voltage	V_5	1dB Attenuation	–	2.2	2.5	V
Potentiometer Resistance	R_5	70dB Attenuation	1.0	1.4	–	kΩ
Potentiometer Voltage	V_5	70dB Attenuation	–	1.2	–	V
Noise Voltage at Output	V_5	V_I = 10mV	–	30	–	µV
Zener Voltage	V_{12}	I_{12} = 5mA	11.2	12.0	13.4	V
Zener Slope Resistance	R_Z		–	30	50	Ω
Breakdown Voltage	$V_{(BR)CBO}$		45	65	–	V
	$V_{(BR)CEO}$	I_3 = 500µA	18	24	–	V
Current Gain	h_{FE}	I_3 = 1mA	50	100	500	
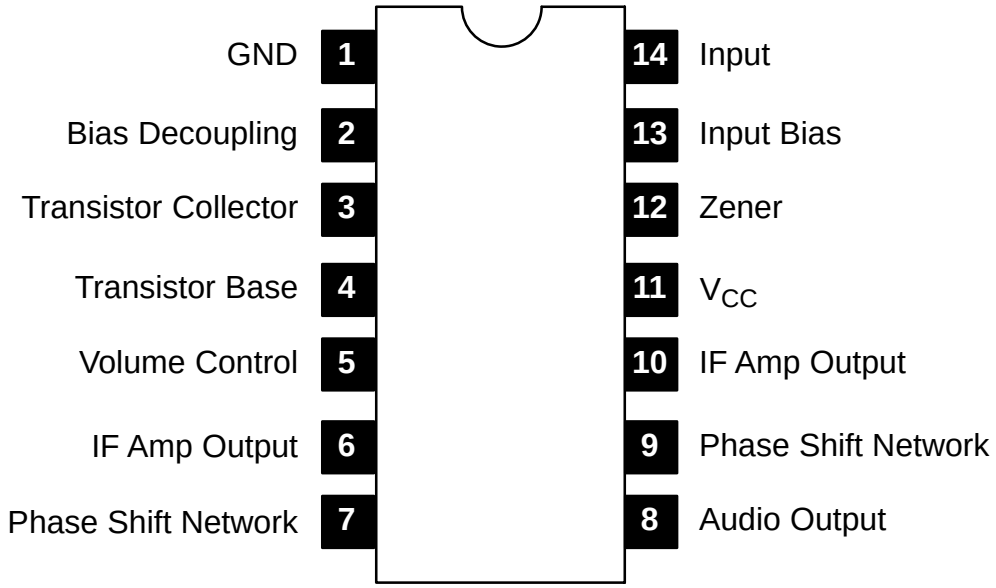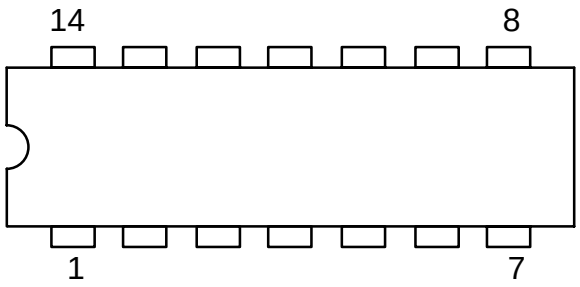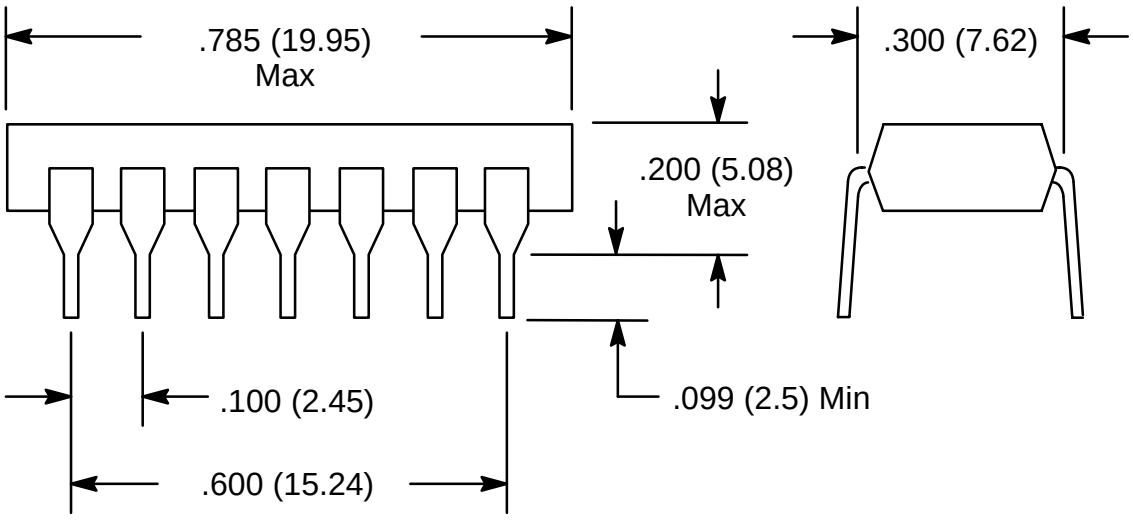
Pin Connection Diagram